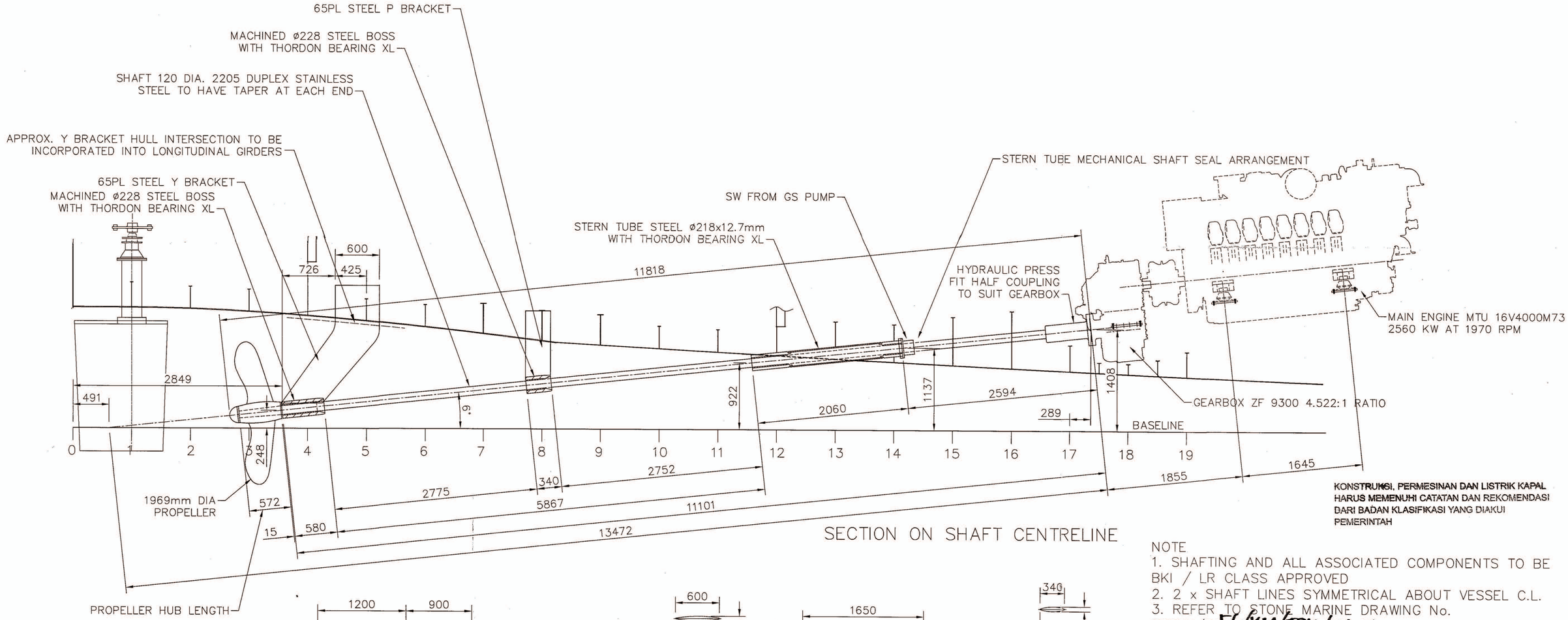

SECTION ON SHAFT CENTRELINE

NOTE
1. SHAFTING AND ALL ASSOCIATED COMPONENTS TO BE BKI / LR CLASS APPROVED
2. 2 x SHAFT LINES SYMMETRICAL ABOUT VESSEL C.L.
3. REFER TO STONE MARINE DRAWING No. 36298/DR-2621 ~~MAT TRK~~ 56/KM/TRK/XII-15

KONSTRUKSI, PERMESINAN DAN LISTRIK KAPAL HARUS MEMENUHI CATATAN DAN REKOMENDASI DARI BADAN KLASIFIKASI YANG DIAKUI PEMERINTAH

DIKETAHUI

A.n. Direktur Jenderal Perhubungan Laut
Direktur Perkapalan dan Kepelautan
u.b.
Kepala Sub Direktorat Kelaiakan Kapal
Jakarta, 19 DEC 2015

DIREKTORAT JENDERAL PERHUBUNGAN LAUT
PERHUBUNGAN

[illegible] RAHMATULLAH
Pembina Tk.I (IV/b)
NIP. 19620605 198903 1 001

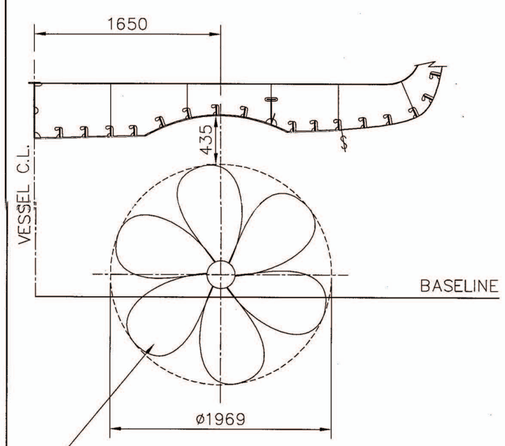

SECTION AT FRAME 3
LKG FWD

PROPELLER 5 BLADE, NICKEL ALUMINIUM BRONZE, HANDED PAIR OUTWARD TURNING

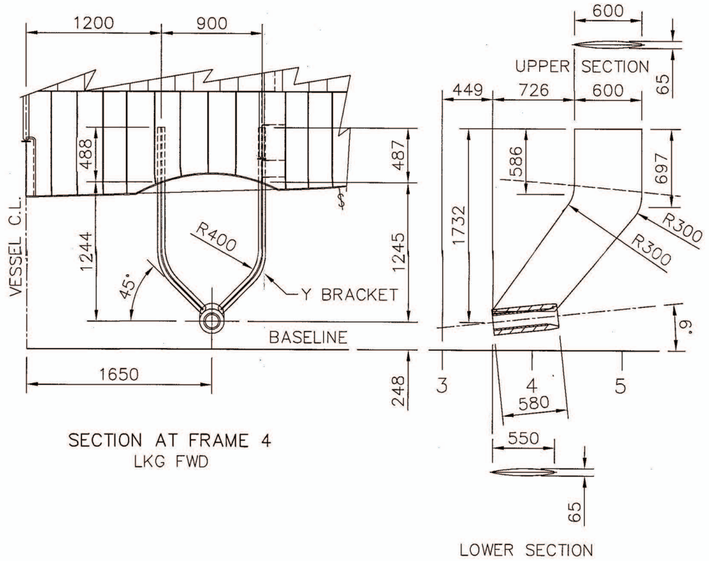

SECTION AT FRAME 4
LKG FWD

Y BRACKET DETAIL

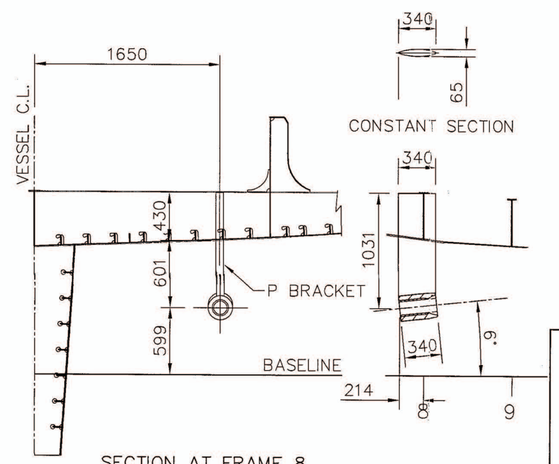

SECTION AT FRAME 8
LKG FWD

P BRACKET DETAIL

Rev.	Description	Date
G	DIMENSIONS ADDED. V BRACKET ARMS REVISED	6.10.15
F	Y BRACKET DIMENSION AND LOCATION CHANGED. BOSS LOCATION NOT CHANGED	29.6.15
E	SHAFT LINE MODIFIED TO LR AND STONE MARINE CHANGES	26.5.15
D	PROPELLER HUB MADE 500 LG, A BRACKET UPDATED. RUDDER SIZE CHANGED	25.11.14
C	PROPELLER BOSS AND BRACKETS UPDATED. DETAILS ADDED	7.10.14
B	V BRACKET ANGLE MODIFIED	3.9.14
A	SHAFT LINE UPDATED, I BRACKET ADDED	5.8.14

PT. DAYA RADAR UTAMA
SHIPYARD & ENGINEERING

Head Office:
JL. L.R.E MARTADINATA, KOMP. VOLKER
TANJUNG PRIOK
JAKARTA UTARA 14310
INDONESIA
Phone: +62 21 430 3180
Fax: +62 21 430 8891
EMAIL: dayaru@cbn.net.id

This drawing and all information on it is the property of Marine Systems and Service Pty Ltd. It is confidential and is given to you for a limited purpose and must be returned on request. Neither this drawing nor any information concerning it may be copied, exhibited or furnished to others. Nor may photographs be taken of any article fabricated or assembled from this drawing without the consent of Marine Systems and Service Pty Ltd

Marine Systems and Service Pty Ltd
Po Box 1230 Fremantle
Western Australia 6959
Tel : 61 8 9335 1182 Fax: 61 8 9335 1233
Email : info@marinesystemsandservice.com

Marine Systems and Service
Naval Architects, Naval Engineers, Ship Design, Marine Equipment Suppliers

YARD No. -	OWNER	MOMAF	
APPR. -	SHIPBUILDER	PT. DAYA RADAR UTAMA	
Class. LRS / BKI	DESIGNER	MARINE SYSTEMS AND SERVICE	
	VESSEL	60m FISHERIES INSPECTION VESSEL	
	TITLE	SHAFTING AND PROPULSION LAYOUT	A2
CHKD -	DATE 5.9.13	DRG No. 121-303-001	REV. G
DRN J. Hudson	SCALE 1:40	SHT 1 of 1	